ALUVENTA

ALUVENTA

Aluventa
Design Guideline

High performance

ALUMINIUM CONDENSERS

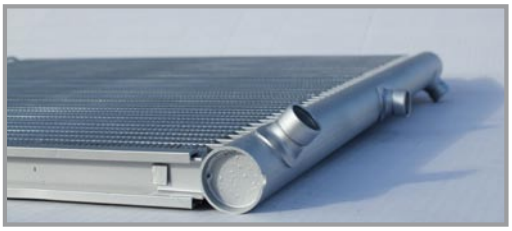

Design guidelines

- Technology
- Refrigerant flow
- Connections
- Joining
- Mounting
- Corrosion
- Coating
- Customize design

Version : 003
Date : 01-10-2012

TECHNOLOGY

Basic principle

In a single pass condenser the temperature of the leaving air will be high at the beginning of the condenser where the refrigerant is a superheated gas. Through the middle of the condenser, the temperature of the air will be below condensing temperature, and at the end, where the condensed refrigerant has become a subcooled liquid, the temperature of the air will be low. This means that the temperature of the mixed air leaving the condenser will be approximately 2-5ºK below condensing temperature.

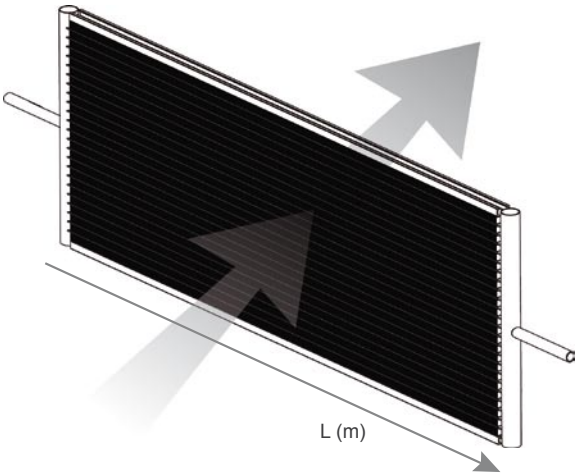

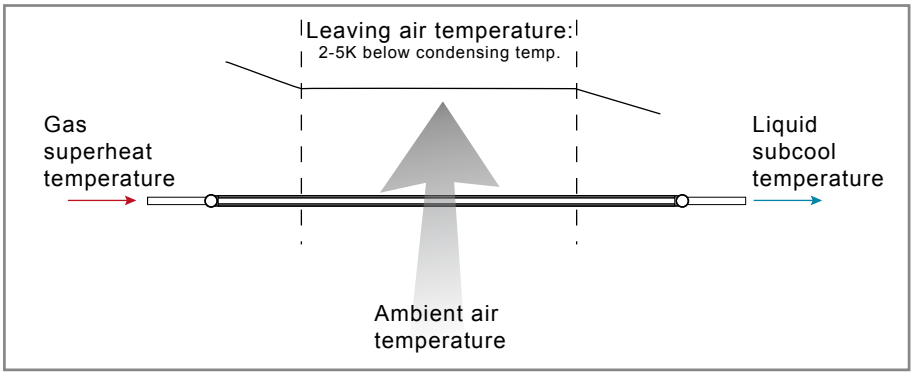

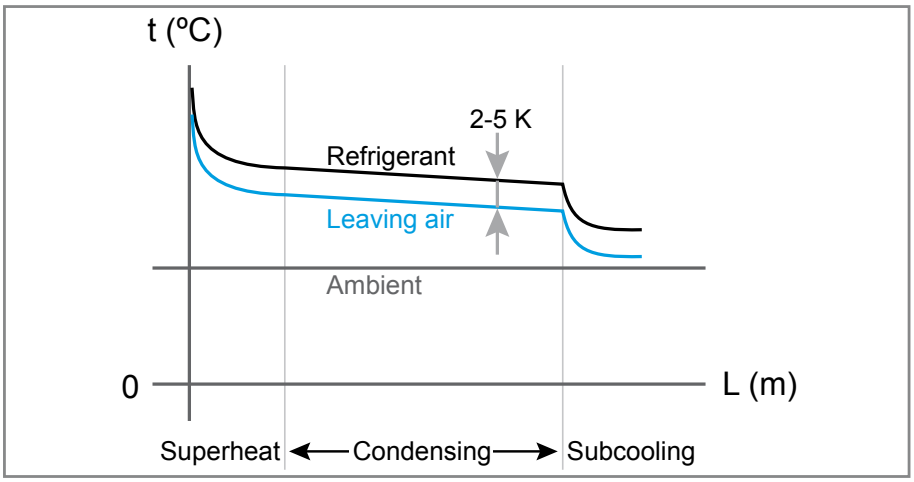

Air pressure drop

Due to the straight through air flow the air pressure drop is low and the lower fan power results in reduced noise and smaller or less fans.

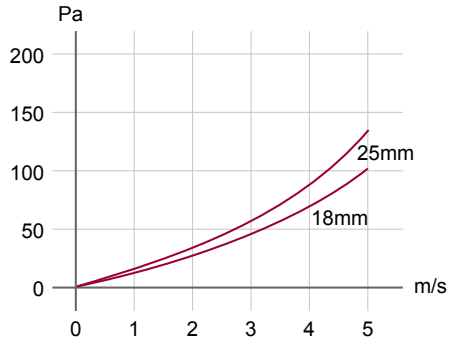

MCT design

Due to the minimal height of the micro channel tube the backside turbolence is minimal, leading to reduced noise and low air pressure drop.

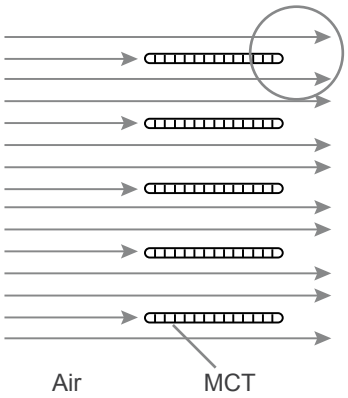

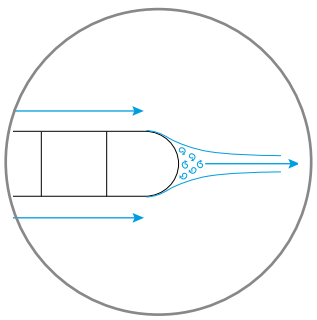

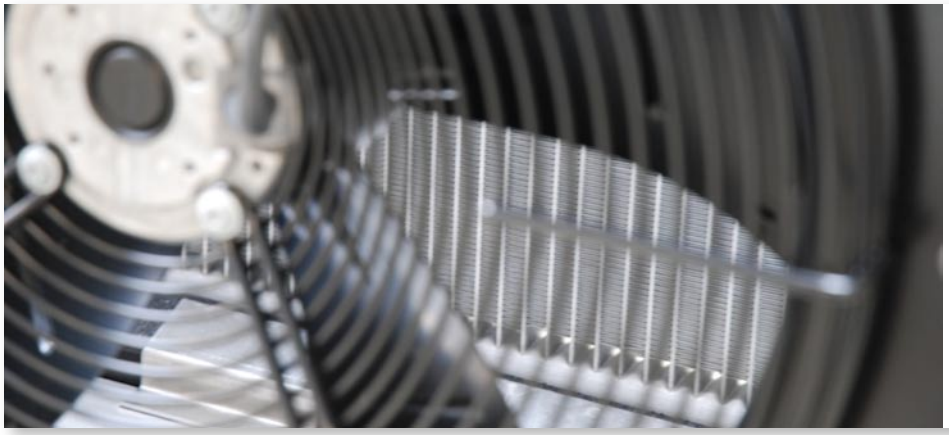

REFRIGERANT FLOW

One pass
100% parrallel flow

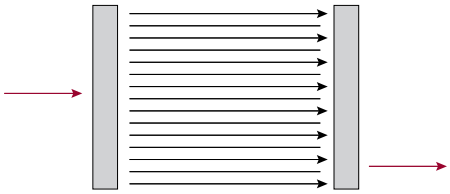

Two pass

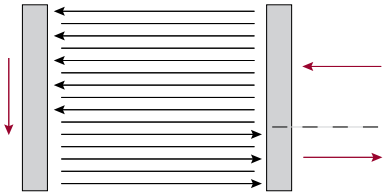

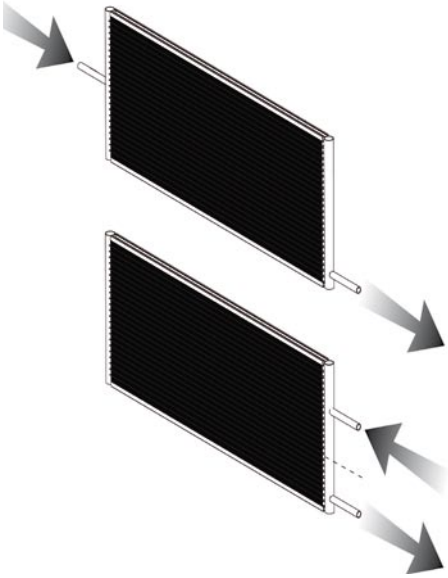

Vertical tubes
Reduced refrigerant pressure drop.
Increased capacity (app. 10%).
Only feasible in some applications.

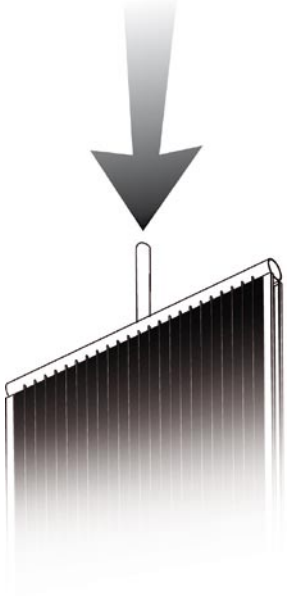

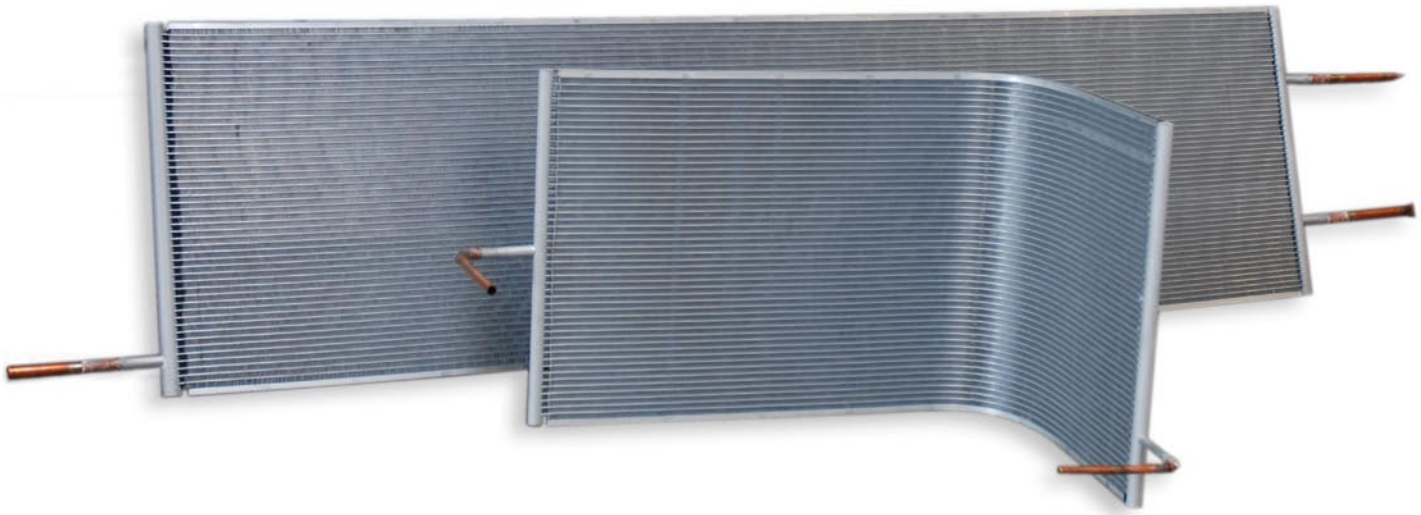

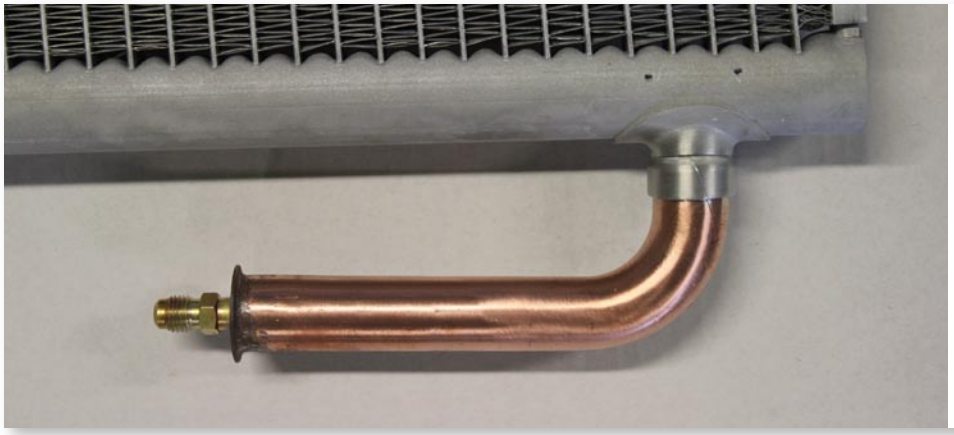

CONNECTIONS

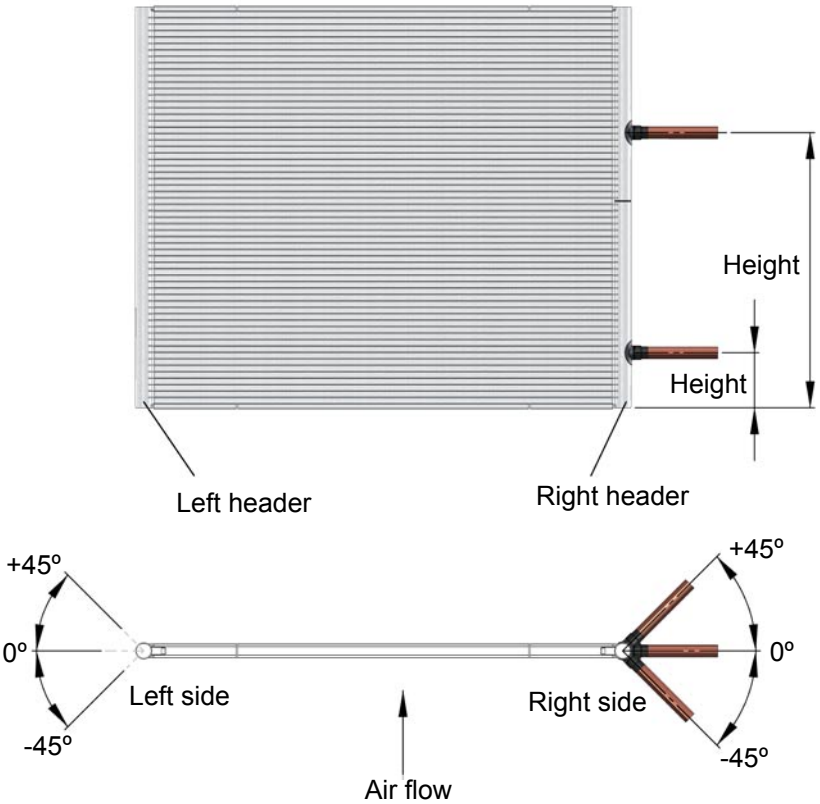

Saddle

Our dedicated HVAC/R solutions focus on optimal flow and high performance. To improve performance and ensure long lifetime, the connections are normally strengthened with a flow optimized saddle.

- The saddle is positioned by the following factors:
- Header (left or right side).
- Height (from bottom of the condenser to the centerline of the connection).
- Angle (+/- 0 or 45º).

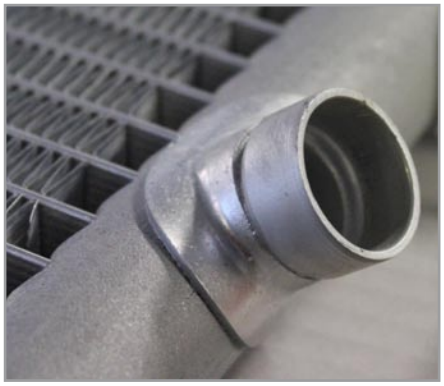

Tube bend-direction

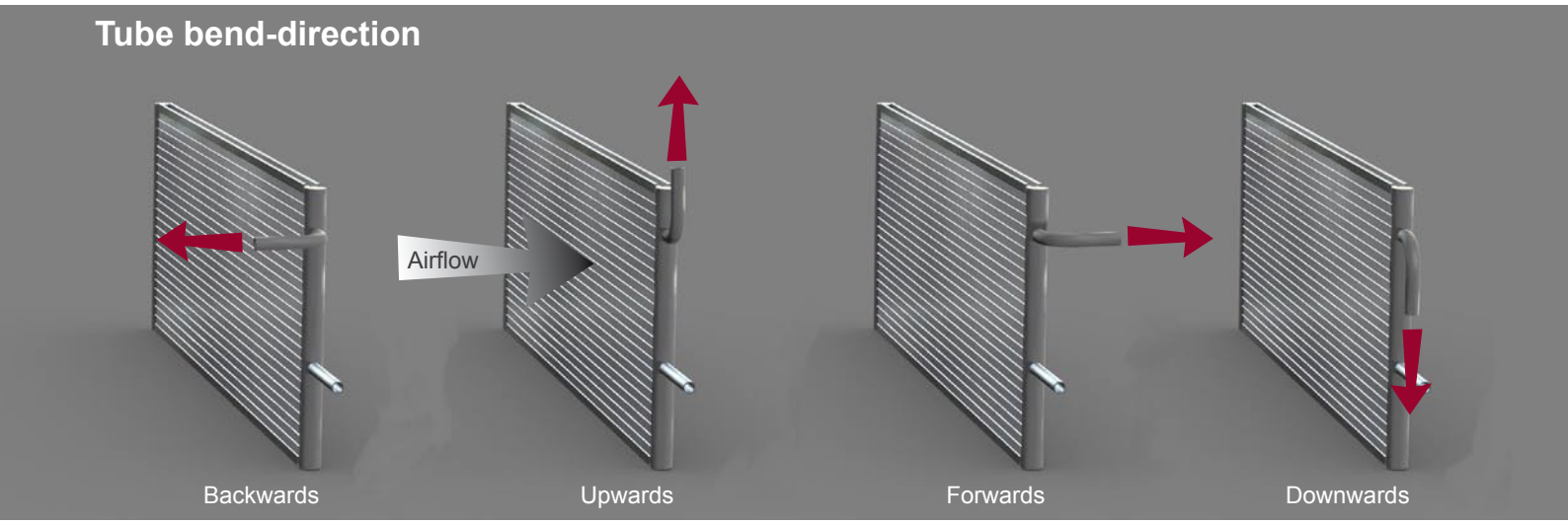

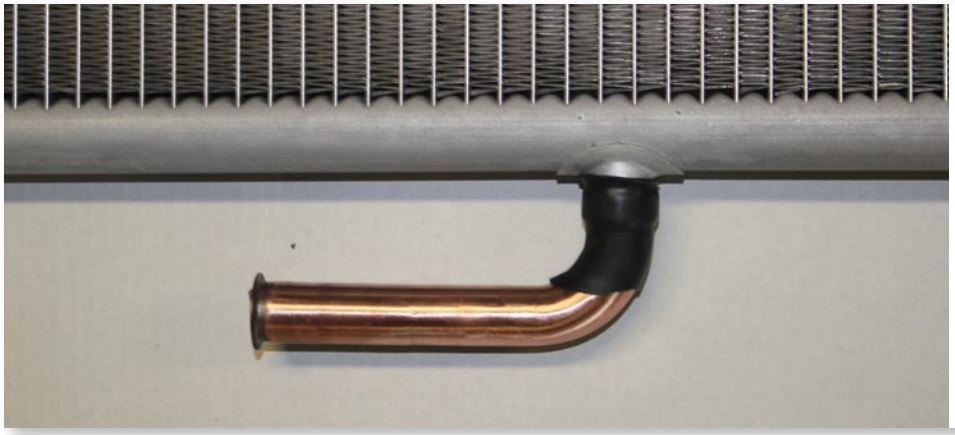

CONNECTIONS

Current tube options

Tube

The tube can be straight or bended (45º or 90º).
Direction of the bend: Down, up, forward or backward.

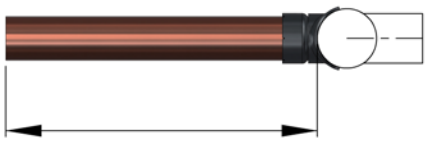

18 mm condenser

Connection size (mm)	12,7	16
Min. distance (mm)	158	158

25 mm condenser

Connection size (mm)	12,7	16	22
Min. distance (mm)	158	158	158

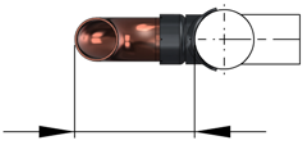

18 mm condenser

Connection size (mm)	12,7	16
Min. distance (mm)	38	48

25 mm condenser

Connection size (mm)	12,7	16	22
Min. distance (mm)	38	48	42

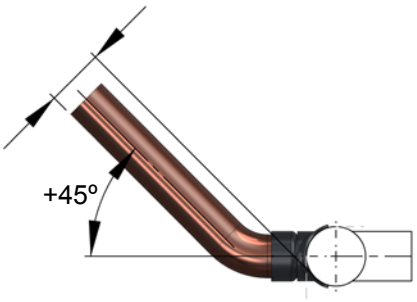

18 mm condenser

Connection size (mm)	12,7	16
Min. distance (mm)	18	23

25 mm condenser

Connection size (mm)	12,7	16	22
Min. distance (mm)	18	23	29

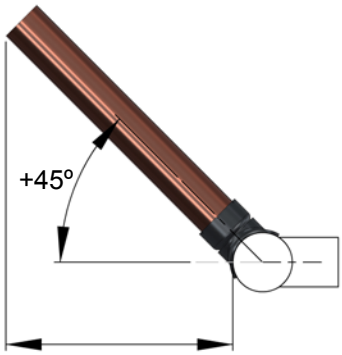

18 mm condenser

Connection size (mm)	12,7	16
Min. distance (mm)	107	108

25 mm condenser

Connection size (mm)	12,7	16	22
Min. distance (mm)	107	108	115

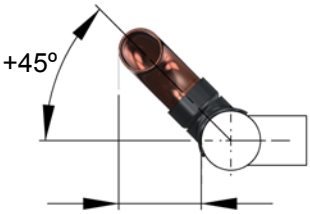

18 mm condenser

Connection size (mm)	12,7	16
Min. distance (mm)	25	32

25 mm condenser

Connection size (mm)	12,7	16	22
Min. distance (mm)	25	32	42

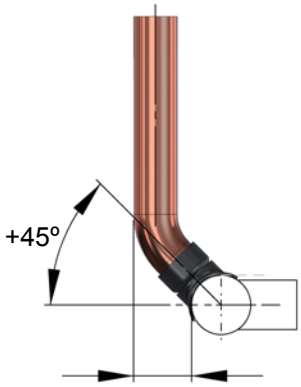

18 mm condenser

Connection size (mm)	12,7	16
Min. distance (mm)	18	23

25 mm condenser

Connection size (mm)	12,7	16	22
Min. distance (mm)	18	23	29

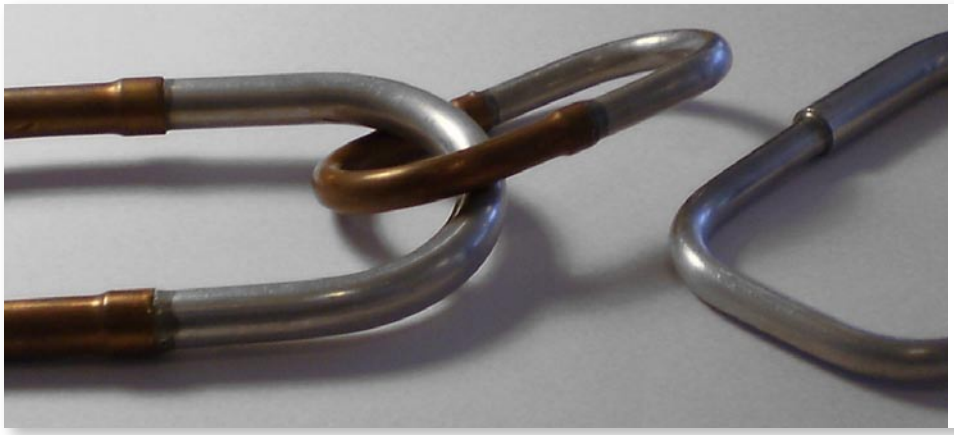

JOINING

Joining methods

Aluventa recommends brazed joints for joining connections.

Flamebrazed: Al/Cu.

For corrosion protection, the flamebrazed joint must be fitted with a heat shrinkable tube, encapsulating the joint.

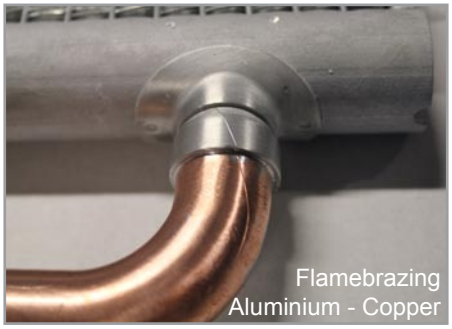

Flamebrazing
Aluminium - Copper

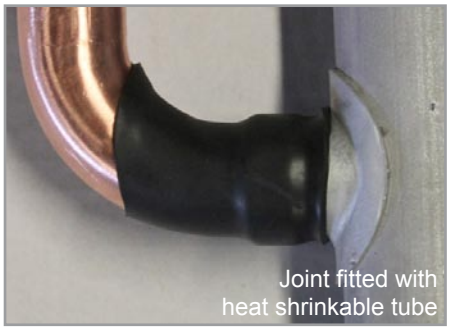

Joint fitted with
heat shrinkable tube

Connection closing methods

There are several methods for closing connection tubes on our product:

- Cu-plate with 1/4” Schrader valve. Necessary for coils filled with over 1 bar nitrogen
- Cu-plate. Necessary for coils fill with over 1 bar nitrogen
- Rubber plug. For coils with 1 bar nitrogen or less
- Plastic cap. For coils with out pressure

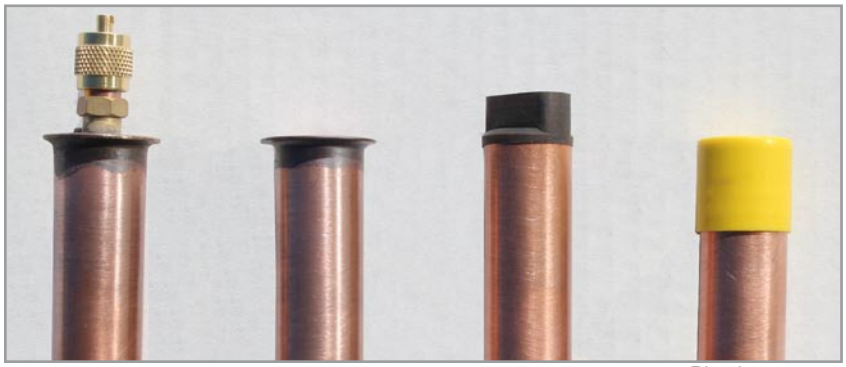

Cu-plate with 1/4” Schrader valve. | Cu-plate. | Rubber plug | Plastic cap.

MOUNTING

Mounting solutions
C-frame

The C-frame is integrated at the top and bottom of the condenser, and is used for mounting the condenser.
This can be done by using the groove in the C-frame. or by inserting screws, rivets or similar into either side of the C-frame.

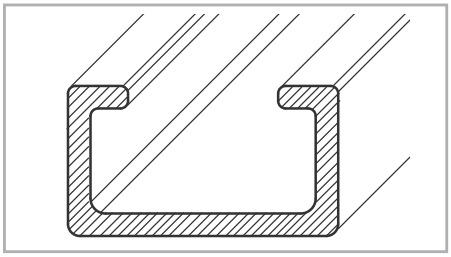

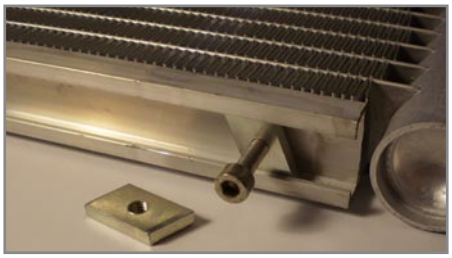

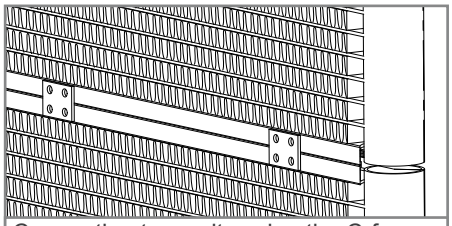

Connecting two units using the C-frame.

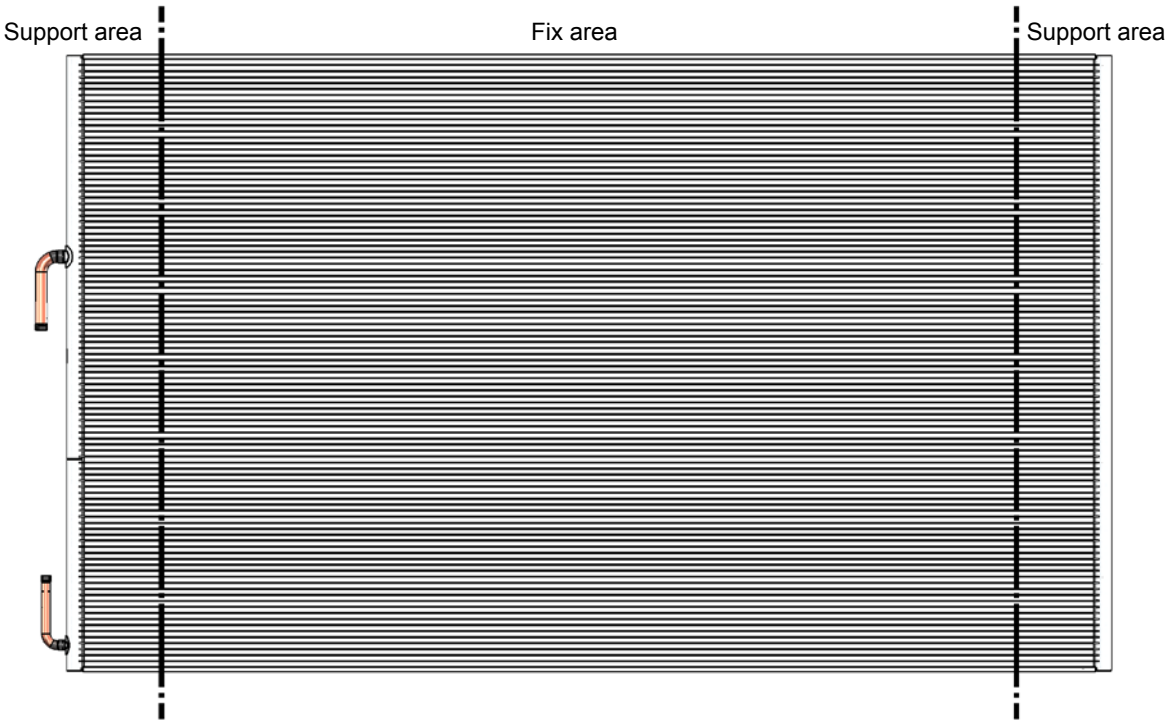

Corrosion

Corrosion

Any metal exposed to the atmosphere/environment will react with the contents of this environment. These reactions are normally referred to as oxidation, corrosion and similar. The extent and nature of the specific reactions that take place depends on the type of metal and on the specific contents of the surrounding environment (temperature, humidity, “pollution”, oxygen).

Some applications and installation sites can challenge the materials system more than others. Special attention must be paid to the corrosion severity of the environment at the installation site. An environment in a high corrosion category will have a much higher and negative impact on the Heat Exchanger than a low corrosion category. Similarly the time of wetness which depends on the operating pattern and the cleanness of the coil will also have a significant influence on the coils corrosion resistance. The local climate and the immediate surroundings play a similar role. A nearby industry or local exhausts or emissions can alter an otherwise favorable and clean environment to a corrosive one. Similarly attention must be paid to installations in busses, trucks or trains that passes through many different regions, climates, environments etc.

Inappropriate Installation and handling can similarly influence corrosion wear of the heat exchanger. When metals of different types are in contact, appropriate corrosion protective measures must be taken. When sheet metal or metal piping is being cut or grinded in or near the unit, sprays of metal dust and sparks can reach the Microchannel Heat Exchanger (MCHX) and be the source of a local corrosion attack. Similarly if for instance rain water can drip onto the Heat Exchanger from bare metal piping or sheet metal etc. There are unfortunately many ways in which corrosion attacks can be initiated or stimulated.

To identify the possible corrosive initiators and conditions for the heat exchangers the environment is divided in three areas: The *General Environment*, the *Specific Environment* and the *Direct Environment*. Relevant information on the different environmets and how to evaluate the environments can be found in the *Aluventa Selection Guideline*.

Corrosion Protection

Materials system design

The Aluminium alloys used in the Aluventa coils are constantly undergoing evaluation in order for the Aluventa products always to meet the requirements and obtain the best performance in the field. This is an ongoing activity where Aluventa is working together with leading Aluminium suppliers and international experts and scientists in the task of constant improving the Aluventa materials system.

E-coating

One method of protecting the MCHX against corrosion is coating, some of which have proven reliable in the field over several years. Aluventa is offering an e-coating solution of the Heat Exchanges that will prevent otherwise fast corrosion mechanisms to occur. Due to the Aluventa coil design and the coating properties this coating has only a very low impact on the coil performance.

Aluventa Selection Guideline

Aluventa have compiled all our knowhow in the *Aluventa Selection Guideline* in order guide our customers when selecting a product for a given operation environment. The *Aluventa Selection Guideline* gives a relevant information and guidance in how to evaluate an installation site and select the right coil for your application.

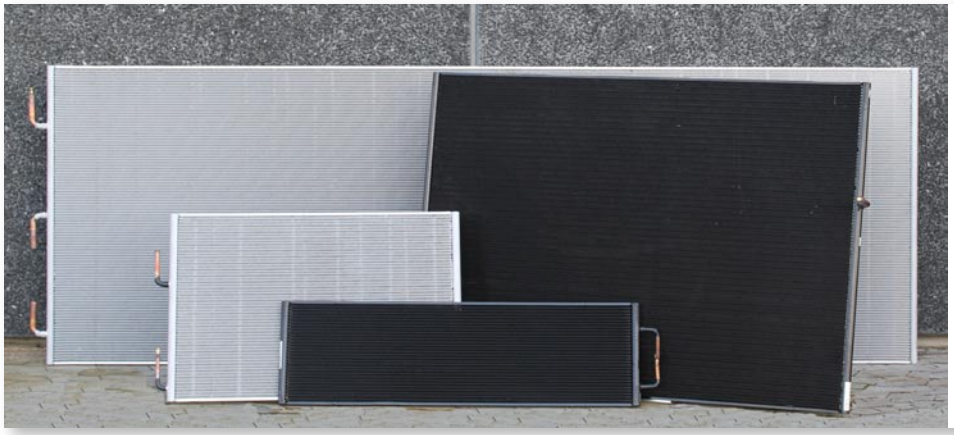

Coating

Electrofin® E-coating

In order to be able to use the MCHX in aggressive atmospheric conditions the condensers requires a coating. There are several corrosion protective coatings available on the marked suitable for HVAC components. Many of which have proven reliable in the field over several years. Specifically for the MCHX e-coating is superior to the others.

E-coating is a full immersion process where the coil is coated with the aid of electrical power. This guaranties that the complete coil surface is coated. Also in the center of the fin.

E-Coating characteristics are:

- Proven technology and process.
- Proven corrosion protection of Aluminium MCHX
- 100% coverage
- 15-30 micron coating layer results in very small performance loss.

Aluventa is offering a coating solution via a sub supplier that will prevent eventual fast corrosion mechanisms to occur. Due to the Aluventa coil design this coating has only a very low impact on the coil performance. This coating is based on a highly specialized technology and only a few companies in the world are able to do this coating and meet the Aluventa specifications.

Our coating supplier quarantines the following specifications:

Technical performance

- Dry Film Thickness: 15-30 micron (ASTM D7091-05)
- Glos -60°: 65-95% (ASTM D523-89)
- Pencil Hardnes: 2H minimum (ASTM D3363-00)
- Water Immersion: >1000 hours @ 38°C (ASTM D870-02)
- Cross Hatch Adhesion: 4B-5B (ASTM D3359-97)
- Impact Resistance: 160 in./lbs. Direct (ASTM D2794-93)
- Salt Spray: 6048+ hours (ASTM B117-97)
- Humidity Resistance: 1000 hours minimum (ASTM D2247-99)
- Durability: Very Flexible, Consistent film
- Heat transfer reduction: <1% (ARI 410)
- Bridging: No bridging guaranteed
- pH Range: 3-12
- Temperature limits: -40 – 163°C

Standards

- MIL-C-46168 Chemical agent resistance – DS2, HCl Gas
- CID-A-A-52474A (GSA)
- MIL-STD 810F, Method 509.4 (Sand and Dust)
- MIL-P-53084 (ME)-TACOM Approval
- MIL-DTL-12468 Decontamination Agent (STB)
- DPG (Dugway Proving Grounds) Soil & Water Exposure Tests
- GM9540P-97 Accelerated Corrosion Test (120 cycles)
- ASTM B117-G85 Modified Salt Spray (Fog) Testing-2000 hours (Tested by ARL for Lockheed Martin)

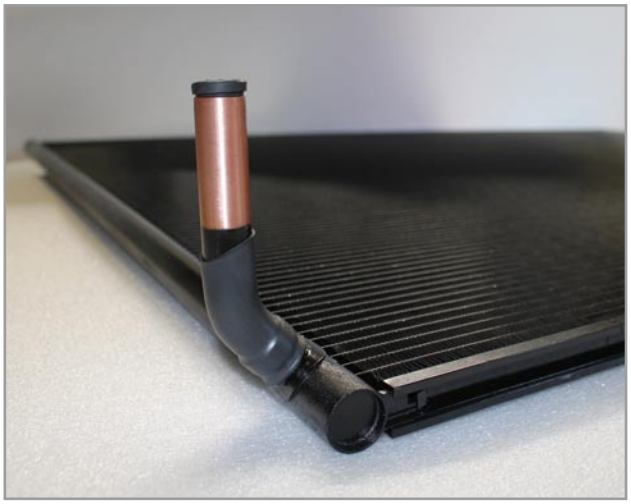

Coating

Blygold® Microcoat

The Blygold® Microcoat is a polyurethane based UV resistant coating filled with aluminium pigmentation to ensure good heat conductivity. The Microcoat process includes a zirconium based treatment of the heat exchanger for additional protection and adhesion of the top layer. The top layer is applied in a spray process specially developed to penetrate into the center of the Heat exchanger and ensure coverage of the entire surface. The Microcoat is specially adapted to the microchannel technology and is derived from the years of experience with corrosion protection of heat exchangers in the field. Our coating supplier guaranties the following specifications:

Blygold® Microcoat characteristics are:

- Proven technology and process.
- Proven corrosion protection of Aluminium MCHX
- 100% coverage
- 25 micron coating layer results in very small performance loss.

Technical performance of coating
Gloss - 60°: 11
Pencil Hardness: H (ASTM D3363)
Cross Hatch Adhesion: 5B (ASTM D3359-83, ISO2409/3270)
Impact Resistance: No visual defects at 5 mm (ISO 1520)
Mechanical hardness (Falling sand abrasion): 38.0litres
Salt Spray: 4,000+ hours (ASTM B117)
Acid Salt Spray: +4000+ hours (ASTM G85 A1)

Coating characteristics
Dry Film Thickness: 0,025 mm average.
Durability: Very flexible coating
Heat Transfer Reduction: 0,5%
Bridging: No Bridging Guaranteed
pH Range: 3-11 (long term)
Temperature Limits: -30°C to 150°C

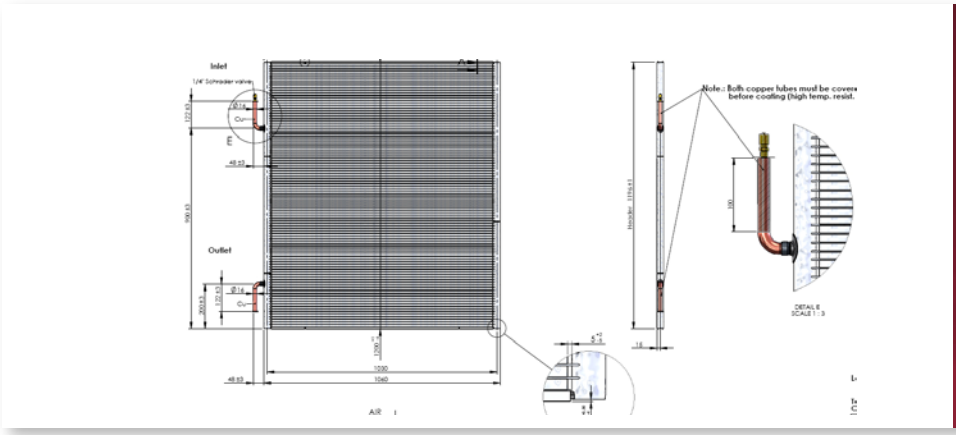

Customize Design

Drawing

All the products are customized so Aluventa will make a specific drawing for each single coil. The drawing will show all details of the coil including tolerances. This ensures that the customer can use the drawing for design of the application and trust that the coil will fit into the application at the installation.

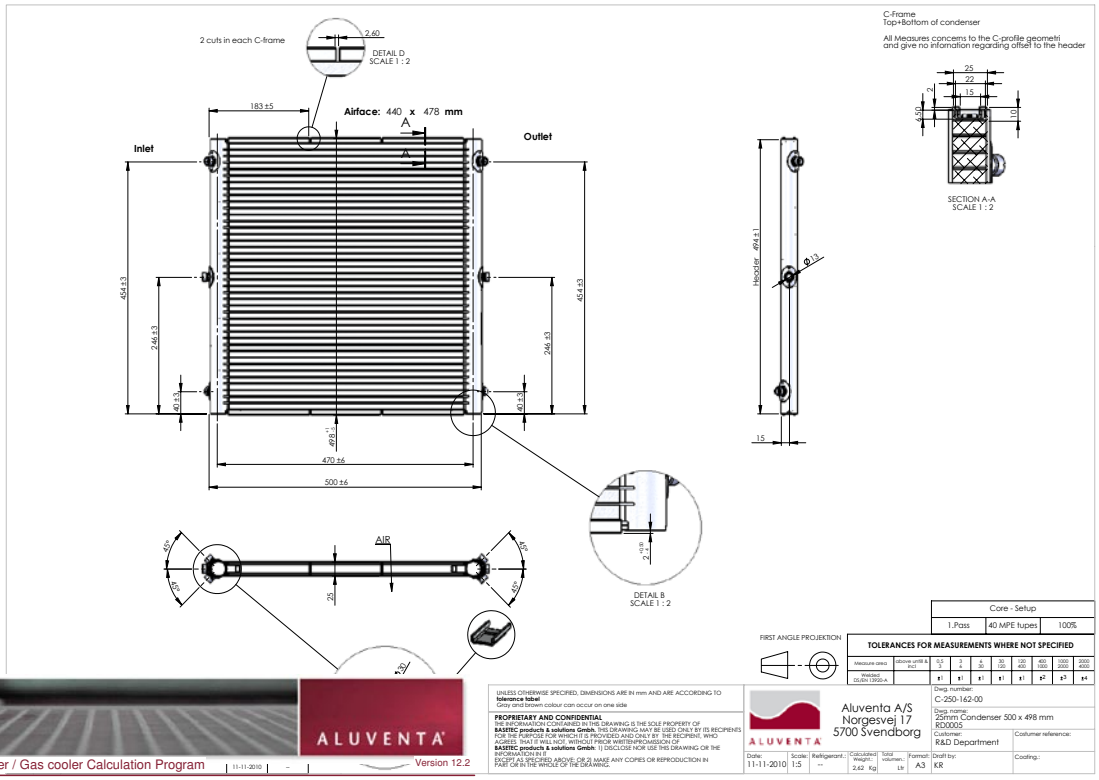

ALUVENTA

Condenser / Gas cooler Calculation Program | 11-11-2010 | - | Version 12.2

Client:	Aluventa	**Proposal No.:**	First proposal
Project Name:	Project 1	**Reference:**	NA
Date:	20-08-2012	**Users Name:**	René Mulvad
Time:	10:48:34		

Refrigerant side

Unit System: (•) SI units ( ) ENG units

(•) Subcritical condensing ( ) Trans critical gas cooling

Refrigerant	R410a
Inlet temperature	80 [°C]
Condensing temperature	50 [°C]
Sub cooling	2 [°K]

Air side

Face velocity	2,5 [m/s]
Inlet temperature	35 [°C]
Inlet relative humidity	50 [%]
Inlet pressure	1,013 [Bar]

Geometry

Fin/tube type

( ) 18 mm/ 0,71 inch Fin and Tube
(•) 25 mm / 0,98 inch Fin And Tube

Header Diameter	**30 [mm]**
HX height	**1200 [mm]**
Face Area	**2,454 [m²]**
H_{face}	**1180 [mm]**
L_{face}	**2080 [mm]**

Core length 2140 [mm]

Number of Sections
( ) Section 1
(•) Section 2
( ) Section 3
( ) Section 4

# pipes	# passes	% area of total
66	1	66 [%]
34	1	34 [%]

Performance **

	Q	T in	T out	P out [°C]	Flow	dP	dP
Air	82719 [W]	35 [°C]	46,7 [°C]		22090 [m³/h]	48,2 [Pa]	
Refrigerant	82719 [W]	80 [°C]	47,89 [°C]	49,89	0,4804 [kg/s]	67,08 [kPa]*	0,9 [°K]

HT area, inside 13,25 [m²]
HT area, outside 81,65 [m²]

iteration = 5

* Refrigerant side pressure loss calculated without nozzles and connection pipes
** Calculation based on vertical coil arrangement and horizontal airflow. Other arrangements may cause deviations.

18 mm
25 mm

High performance
Aluminiumcondenser
Micro channel tube

These recommendations and guidelines reflect our experience. They can neither replace the assessment of the installation location, conditions and environment by experts nor the assessment of possible corrosion attack. The recommendations and guidelines are merely intended for technical information purposes. We assume no liability for the completeness and correctness of the information. The information is intended to support the technical assessment of the installation location conditions.

ALUVENTA

Aluventa A/S • Norgesvej 17 • DK - 5700 Svendborg • Denmark

Phone +45 63223300 • Fax +45 63223301 • www.aluventa.com